Quick-Assembled Plugs

The Mod Center in Spartanburg, SC, will perform the assembly of the bus plugs in 3 days or less for most orders. Bid Manager™ enables you to "build" the appropriate catalog number. When the order is entered in Bid Manager, it will automatically transfer the order to suffix "QAP." Please see the following rules for building the assembled catalog number.

Catalog Numbering Selection

Quick-Assembled Plugs—Breaker Unit ①②

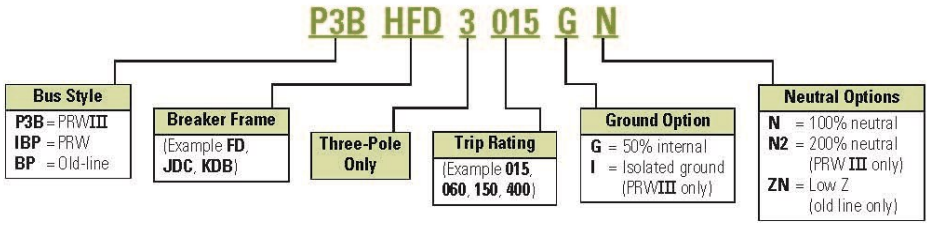

Quick-Assembled Plugs—Fusible Unit ②③④

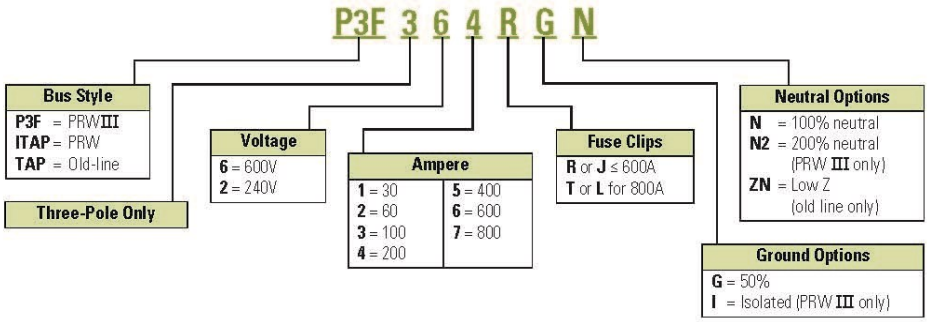

Notes

① Do not leave space between characters. Example: **P3BHFD3015GN**.
② Contact your local Eaton Field Sales office for help in assigning a catalog number for a specific application.
③ Do not leave space between characters. Example: **P3F264RGN**.
④ "H" clips are standard for Pow-R-Way and vintage busway products unless specified by adding "R" or "J" in the catalog number. Example: **P3F264RGN**, **ITAP361JGN**.